Energy-saving motors (ESM)

Energy-saving motors (ESM)	316
Air performance curves	320
Energy-saving axial fans	326

Energy-saving motors (ESM)

- **Material:** Housing made of die-cast aluminium
  Rotor: Coated in black
- **Direction of air flow:** "V" or "A" (depending on axial impeller used)
- **Direction of rotation:** Counter-clockwise, seen on shaft end
- **Type of protection:** IP 44
- **Insulation class:** "B"
- **Mounting position:** Any
- **Condensate discharges:** None
- **Mode of operation:** Continuous operation (S1)
- **Bearings:** Maintenance-free ball bearings

Nominal data	Curve	Nominal voltage	Frequency	Upper speed (1)	Lower speed (1)	Power input	Power output	Perm. amb. temp.	Mass
Type		**VAC**	**Hz**	**rpm**	**rpm**	**W**	**W**	**°C**	**kg**
M1G055-BD95 -12	A	1~ 115	50/60	2200	1500	22.0	15.0	-30 to +50	0.9
M1G055-BD91 -12	A	1~ 230							
M1G055-BD95 -16	B	1~ 115	50/60	1750	1300	22.0	12.5	-30 to +50	0.9
M1G055-BD91 -16	B	1~ 230							
M1G055-BD95 -21	C	1~ 115	50/60	1550	1100	21.0	10.4	-30 to +50	0.9
M1G055-BD91 -21	C	1~ 230							

subject to alterations (1) preprogrammed speeds

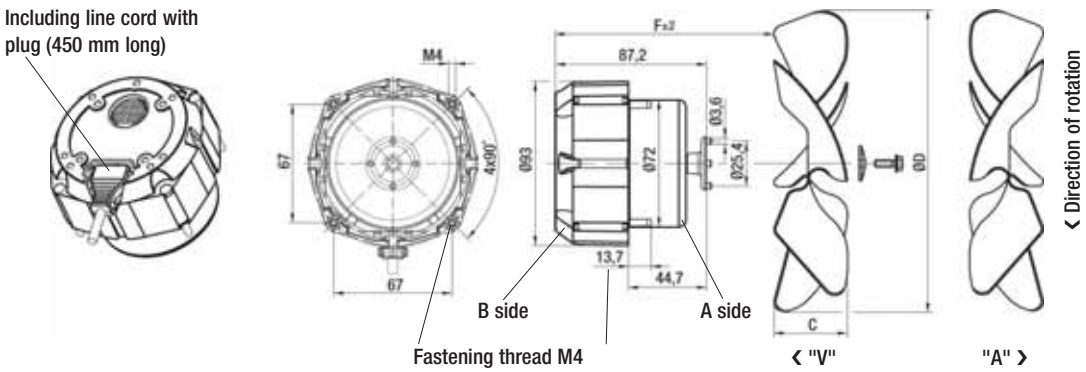

Connection lead p. 374 | Programming device p. 375 | Axial impeller p. 377 | (Basket) guard grille p. 378 | Wall ring p. 379 | Mounting angle p. 381

ebmpapst

- **Motor protection:** Via electronics
- **Electrical connection:** Line cord with plug
- **Protection class:** II
- **Product conforming to standard:** CE
- **Approvals:** VDE, UL
- **Curves:** Page 320

- **Speed settings:** The pre-programmed upper speed is reached with the speed relay open; lower speed is reached when the speed relay is closed.
  Speeds from 10% to 100% of the maximum speed can be preset using the programming unit (see page 375). However, we recommend not allowing it to fall below 1000 rpm (Ⓐ Ⓑ Ⓒ).
- **Mounting:** Guard grille and wall ring are mounted onto the protruding thread ends of the A side.
- **Axial impeller mounting:** Mounted to the motor shaft using a plastic adapter with pulling peg and an M4 screw.

Axial impellers		Blade angle 22° ± 1°30´				Blade angle 28° ± 1°30´				Blade angle 34° ± 1°30´			
Ø D	rpm	m³/h (2)	W (3)	F	C	m³/h (2)	W (3)	F	C	m³/h (2)	W (3)	F	C
154	2200	250	4.0	74.0	27.5	310	5.3	71.5	32.0	350	6.7	69.0	37.0
	1500	170	1.3			210	1.7			240	2.1		
172	2200	380	7.0	72.0	31.0	440	10.0	69.5	36.0	500	13.6	66.5	42.0
	1500	260	2.2			300	3.2			340	4.3		
200	2200	560	13.4	71.5	32.0	640	(4)19.5	69.0	37.5				
	1500	380	4.3			435	6.2						
154	1750	200	2.0	74.0	27.5	250	2.7	71.5	32.0	280	3.4	69.0	37.0
	1300	150	1.3			215	1.7			240	2.1		
172	1750	300	3.5	72.0	31.0	350	5.0	69.5	36.0	400	6.8	66.5	42.0
	1300	225	2.2			300	3.2			345	4.3		
200	1750	450	6.7	71.5	32.0	510	9.9	69.0	37.5	620	(4)16.8	65.0	45.0
	1300	335	4.2			440	6.2			530	10.6		
154	1550	180	1.4	74.0	27.5	220	1.9	71.5	32.0	240	2.3	69.0	37.0
	1100	130	0.5			155	0.7			170	0.8		
172	1550	270	2.5	72.0	31.0	310	3.5	69.5	36.0	350	4.8	66.5	42.0
	1100	190	0.9			220	1.3			250	1.7		
200	1550	400	4.7	71.5	32.0	450	6.9	69.0	37.5	550	(4)12.7	65.0	45.0
	1100	285	1.7			320	2.5			390	4.5		
230	1550	710	(4)15.4	70.0	35.0								
	1100	505	6.0										

(2) Running at free air flow (3) Power requirement of impeller (4) Permitted with corresponding cooling of the motor (shaft power > output power)

- **Electr. connection:**

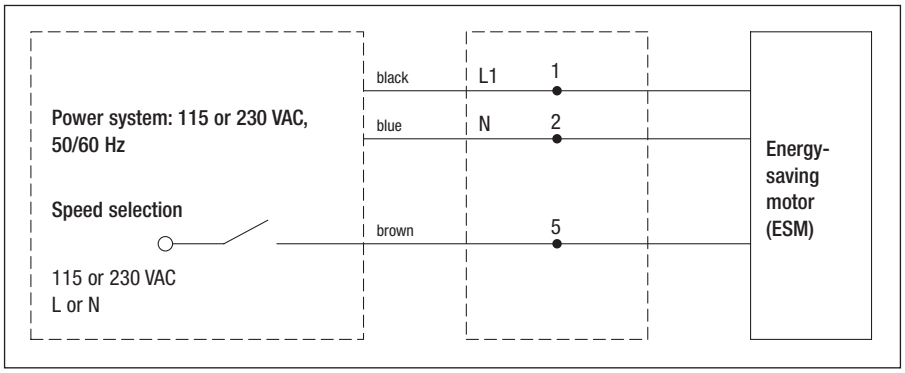

Energy-saving motors (ESM)

- **Material:** Housing made of die-cast aluminium
  Rotor: Coated in black
- **Direction of air flow:** "V" or "A" (depending on axial impeller used)
- **Direction of rotation:** Counter-clockwise, seen on shaft end
- **Type of protection:** IP 44
- **Insulation class:** "B"
- **Mounting position:** Any
- **Condensate discharges:** None
- **Mode of operation:** Continuous operation (S1)
- **Bearings:** Maintenance-free ball bearings

Nominal data	Curve	Nominal voltage	Frequency	Upper speed (1)	Lower speed (1)	Power input	Power output	Perm. amb. temp.	Mass
Type		VAC	Hz	rpm	rpm	W	W	°C	kg
M1G055-BD91 -45	D	1~ 115	50/60	1400	1000	9.0	5.9	-30 to +50	0.9
M1G055-BD87 -25	D	1~ 230							
M1G055-BD95 -26	E	1~ 115	50/60	1400	1000	27.0	12.0	-30 to +50	0.9
M1G055-BD91 -26	E	1~ 230							
M1G055-BD91 -17	F	1~ 115	50/60	1200	800	12.0	7.5	-30 to +50	0.9
M1G055-BD87 -17	F	1~ 230							
M1G055-BD95 -30	G	1~ 115	50/60	1200	800	15.4	6.3	-30 to +50	0.9
M1G055-BD91 -30	G	1~ 230							

subject to alterations (1) preprogrammed speeds

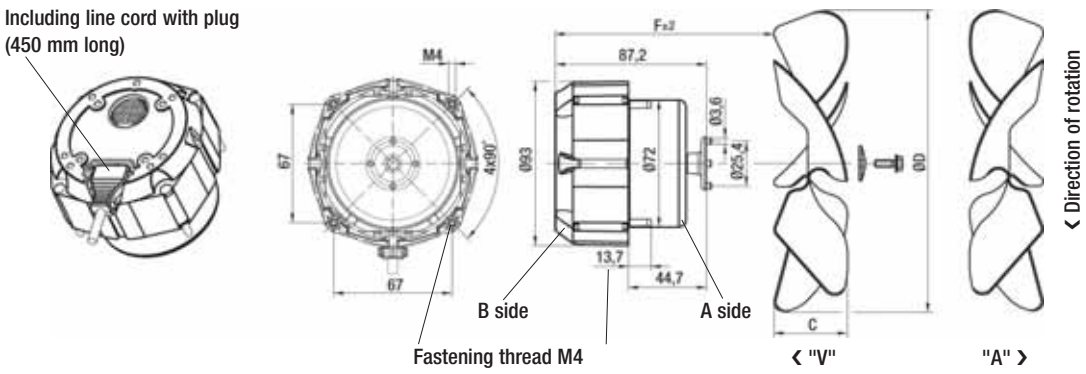

Connection lead p. 374 | Programming device p. 375 | Axial impeller p. 377 | (Basket) guard grille p. 378 | Wall ring p. 379 | Mounting angle p. 381

ebmpapst

- **Motor protection:** Via electronics
- **Electrical connection:** Line cord with plug
- **Protection class:** II
- **Product conforming to standard:** CE
- **Approvals:** VDE, UL
- **Curves:** Page 320

- **Speed settings:** The pre-programmed upper speed is reached with the speed relay open; lower speed is reached when the speed relay is closed.
  Speeds from 10% to 100% of the maximum speed can be preset using the programming unit (see page 375). However, we recommend not allowing it to fall below 600 rpm (Ⓓ Ⓕ) or 1000 rpm (Ⓔ Ⓖ).
- **Mounting:** Guard grille and wall ring are mounted onto the protruding thread ends of the A side.
- **Axial impeller mounting:** Mounted to the motor shaft using a plastic adapter with pulling peg and an M4 screw.

Axial impellers		Blade angle 22° ± 1°30´				Blade angle 28° ± 1°30´				Blade angle 34° ± 1°30´			
Ø D	rpm	m³/h (2)	W (3)	F	C	m³/h (2)	W (3)	F	C	m³/h (2)	W (3)	F	C
154	1400	160	1.0	74.0	27.5	200	1.3	71.5	32.0	220	1.7	69.0	37.0
	1000	115	0.4			145	0.5			160	0.6		
172	1400	240	1.8	72.0	31.0	280	2.5	69.5	36.0	320	3.5	66.5	42.0
	1000	170	0.6			200	1.0			230	1.3		
200	1400	360	3.4	71.5	32.0	410	5.0	69.0	37.5				
	1000	260	1.3			295	1.8						
200	1400									500	8.6	65.0	45.0
	1000									360	3.1		
230	1400	640	11.0	70.0	35.0	700	(4)12.5	66.0	43.0	860	(4)14.7	62.5	50.0
	1000	460	4.0			500	4.6			615	5.3		
154	1200	140	0.6	74.0	27.5	170	0.8	71.5	32.0	190	1.1	69.0	37.0
	800	95	0.2			110	0.2			130	0.3		
172	1200	210	1.1	72.0	31.0	240	1.6	69.5	36.0	270	2.2	66.5	42.0
	800	140	0.3			160	0.5			180	0.7		
200	1200	310	2.1	71.5	32.0	350	3.2	69.0	37.5	420	5.4	65.0	45.0
	800	210	0.6			235	1.0			290	1.6		
230	1200	550	(4) 6.9	70.0	35.0	600	(4) 7.9	66.0	43.0	740	(4) 9.3	62.5	50.0
	800	365	2.0			400	2.3			495	2.7		
254	1200	610	(4)10.3	69.0	37.0								
	800	405	3.0										

(2) Running at free air flow (3) Power requirement of impeller (4) Permitted with corresponding cooling of the motor (shaft power > output power)

- **Electr. connection:**

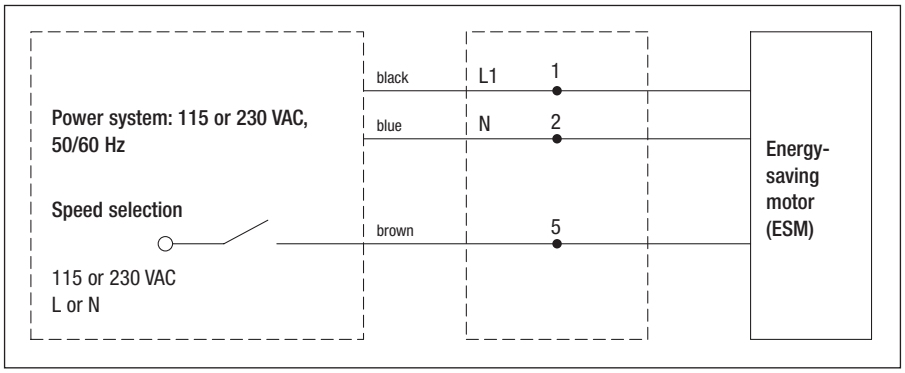

Energy-saving motors (ESM)

Air performance curves

Ø 154, 2200 rpm / 1500 rpm

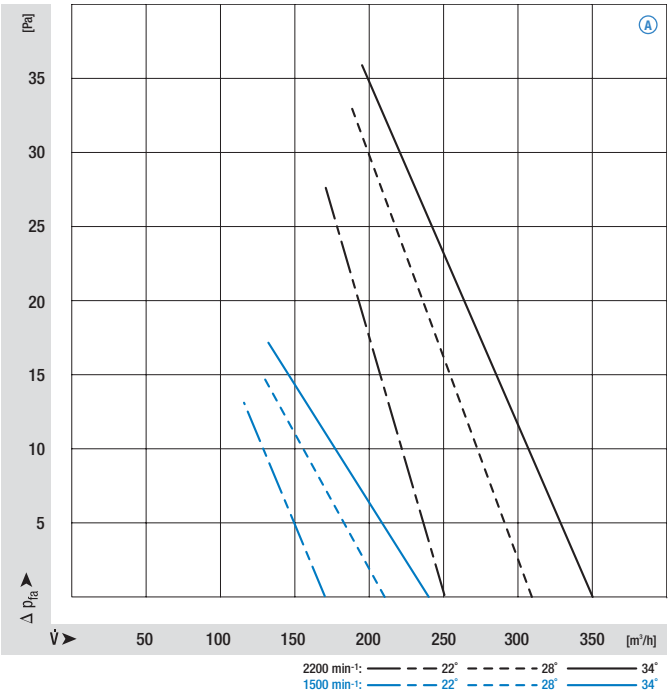

Ø 172, 2200 rpm / 1500 rpm

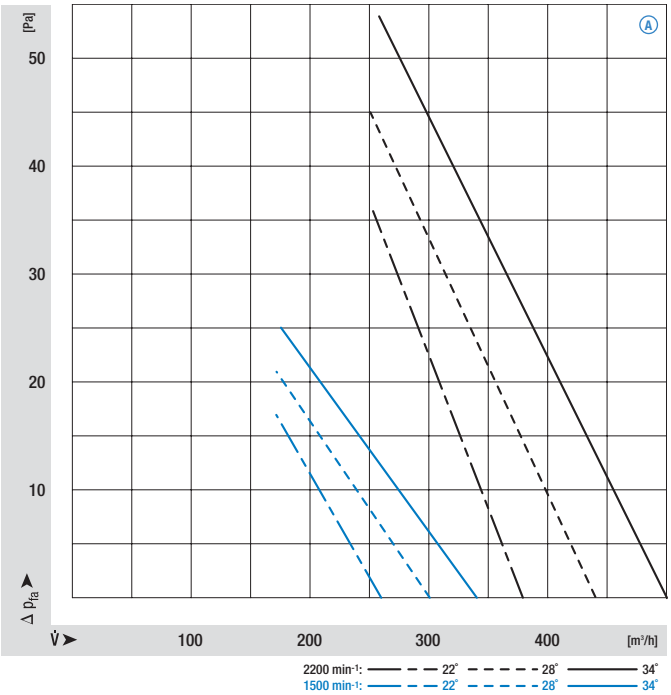

Ø 200, 2200 rpm / 1500 rpm

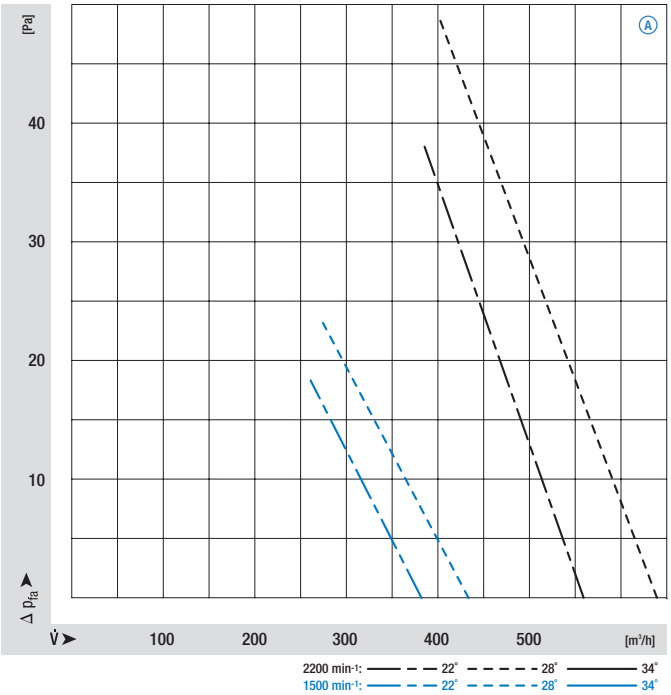

ebmpapst

Ø 154, 1750 rpm / 1300 rpm

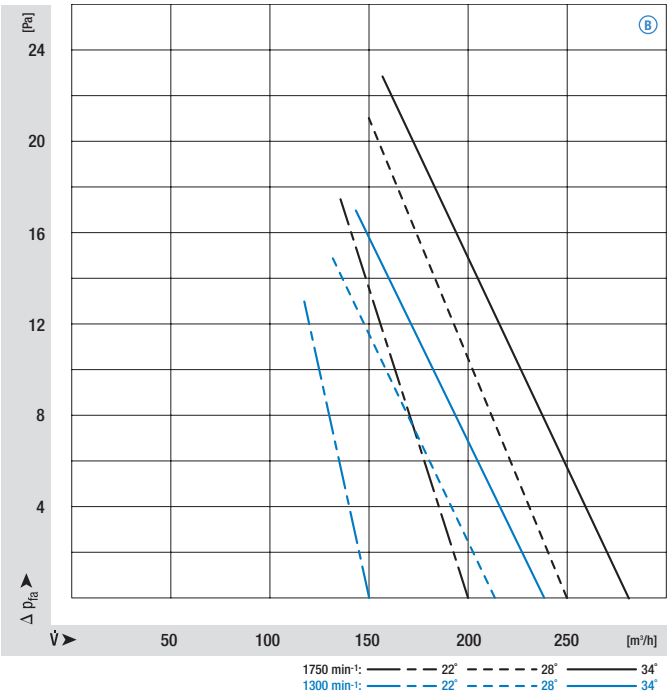

Ø 172, 1750 rpm / 1300 rpm

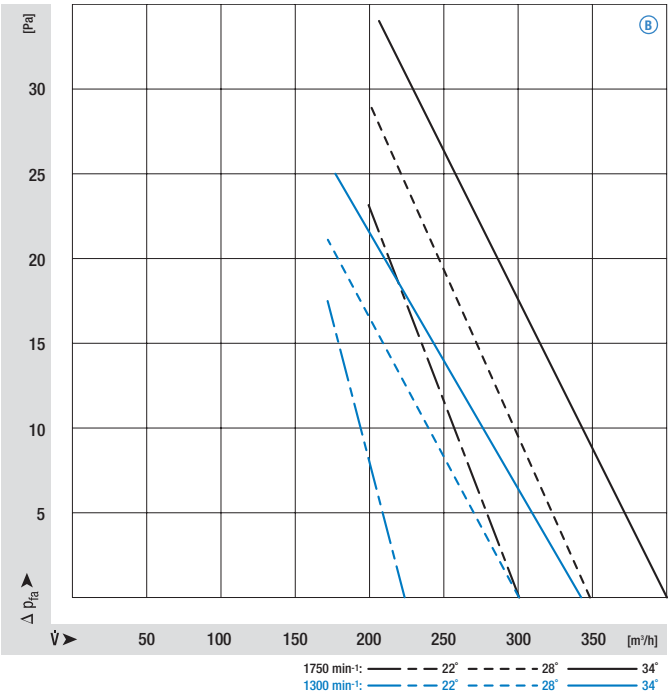

Ø 200, 1750 rpm / 1300 rpm

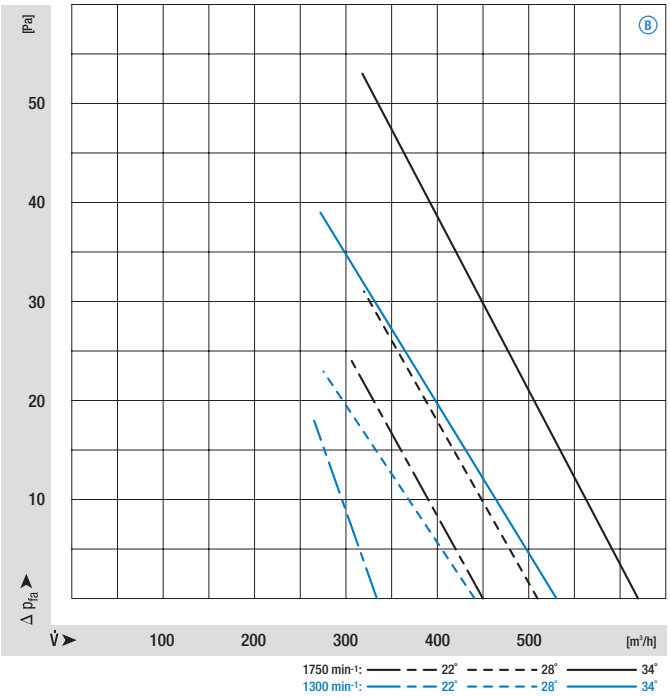

Energy-saving motors (ESM)

Air performance curves

Ø 154, 1550 rpm / 1100 rpm

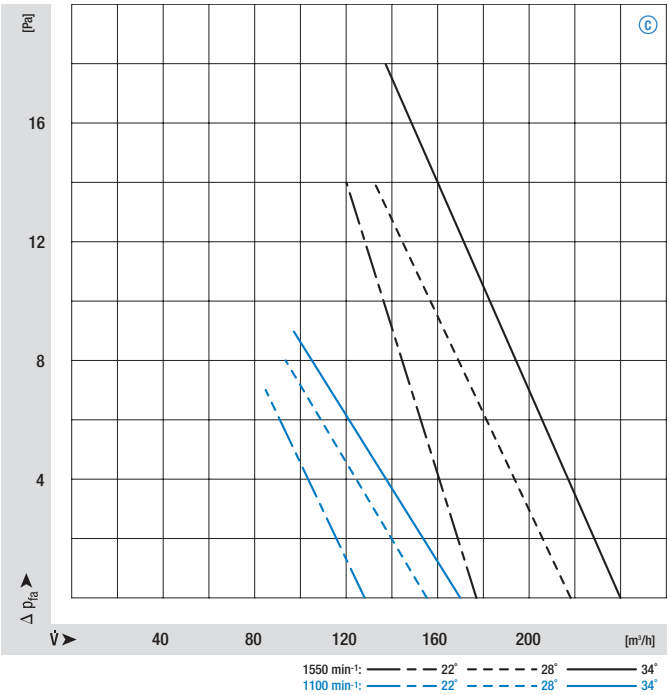

Ø 172, 1550 rpm / 1100 rpm

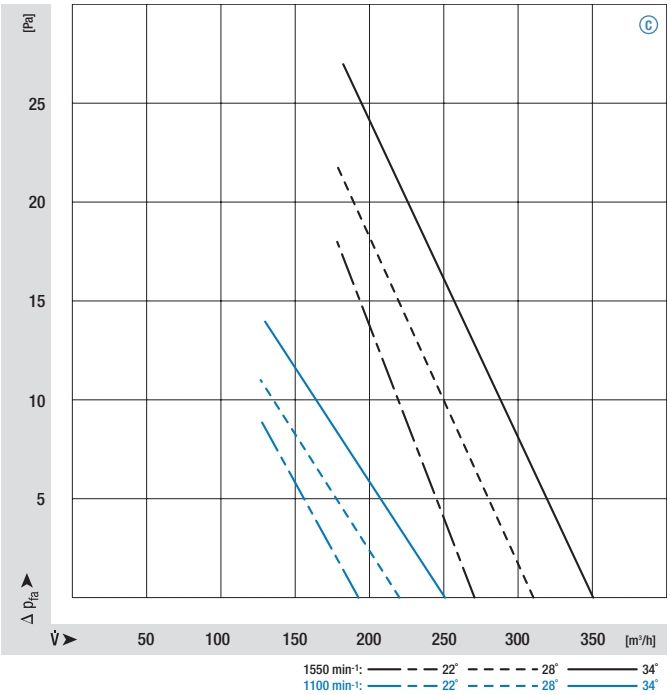

Ø 200, 1550 rpm / 1100 rpm

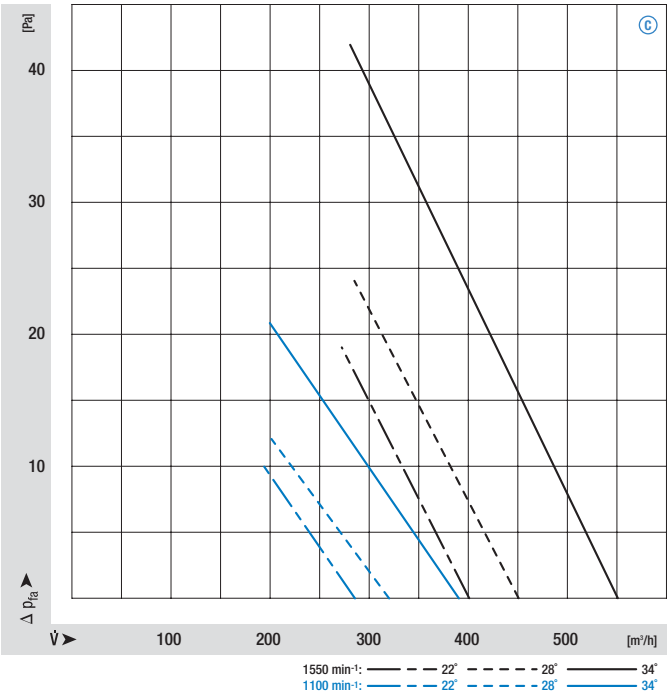

Ø 230, 1550 rpm / 1100 rpm

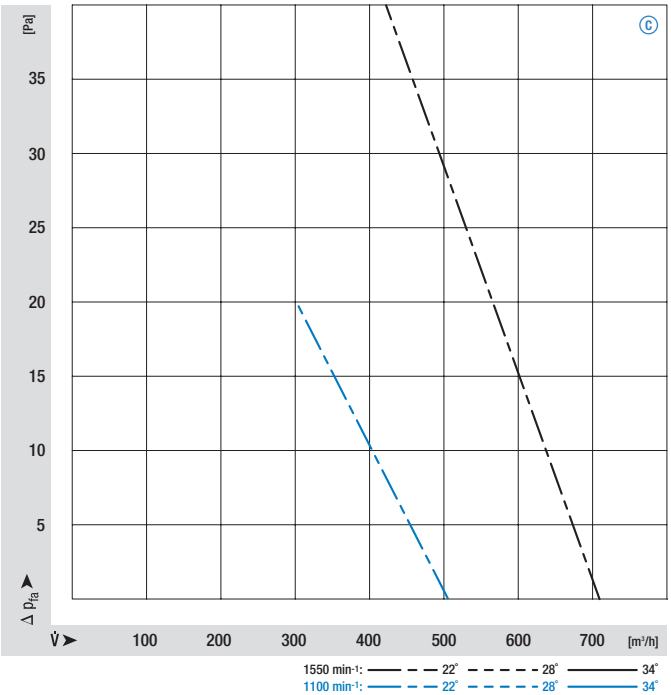

ebmpapst

Ø 154, 1400 rpm / 1000 rpm

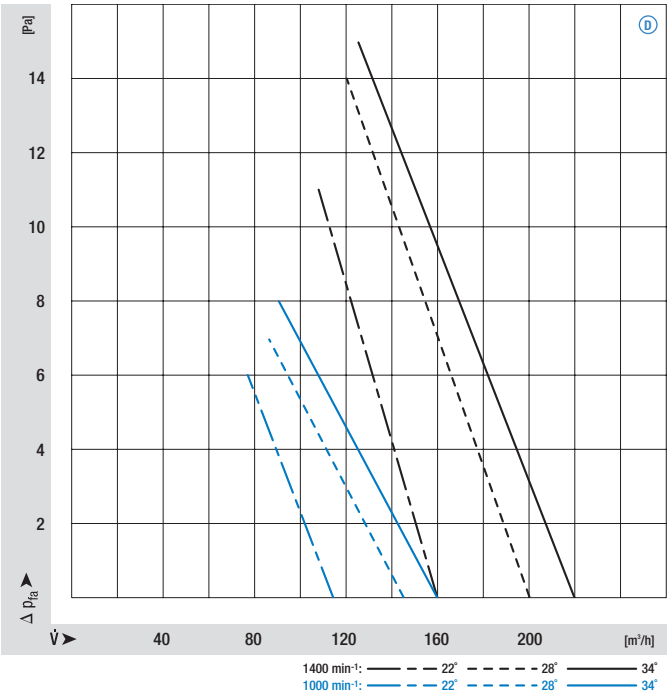

Ø 172, 1400 rpm / 1000 rpm

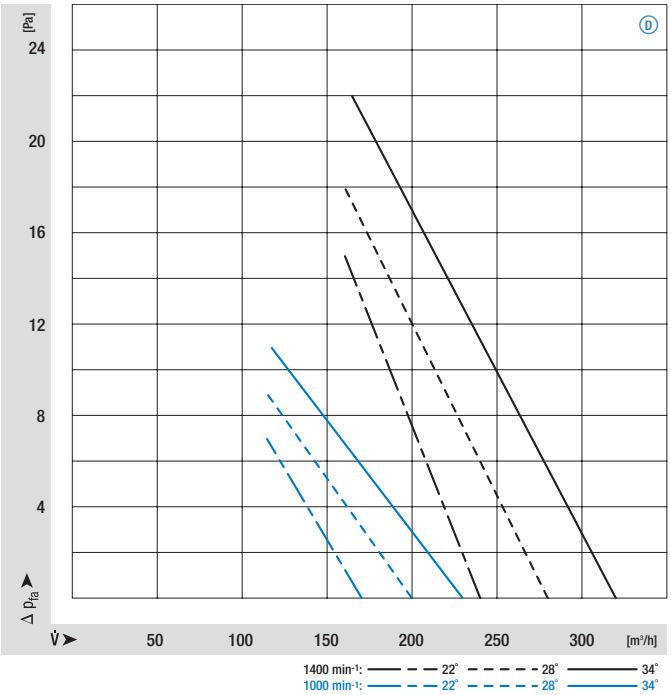

Ø 200, 1400 rpm / 1000 rpm

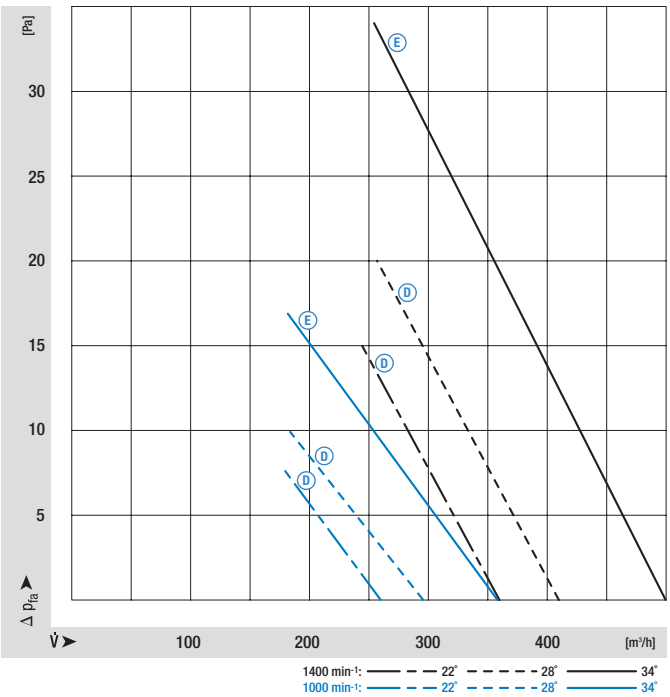

Ø 230, 1400 rpm / 1000 rpm

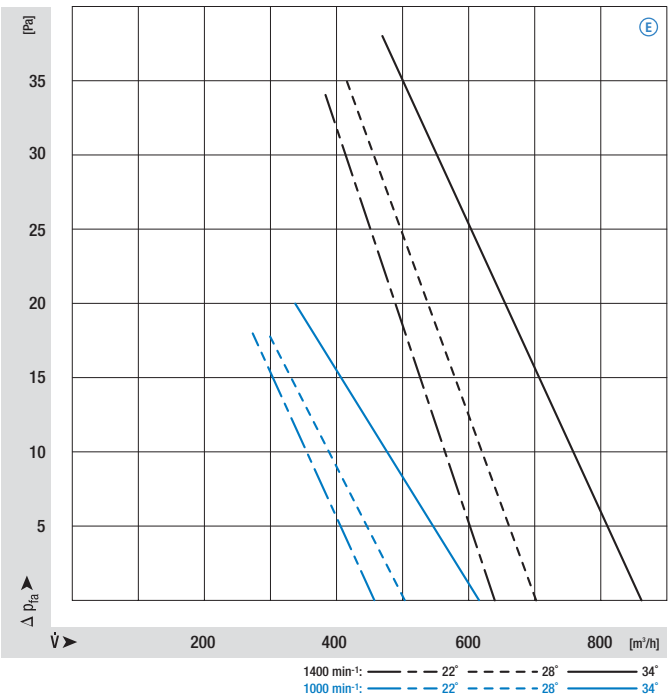

Energy-saving motors (ESM)

Air performance curves

Ø 154, 1200 rpm / 800 rpm

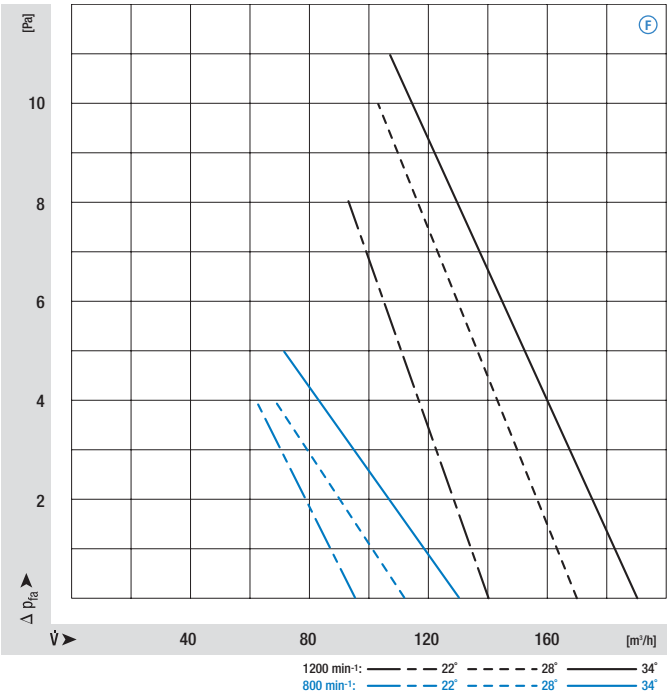

Ø 172, 1200 rpm / 800 rpm

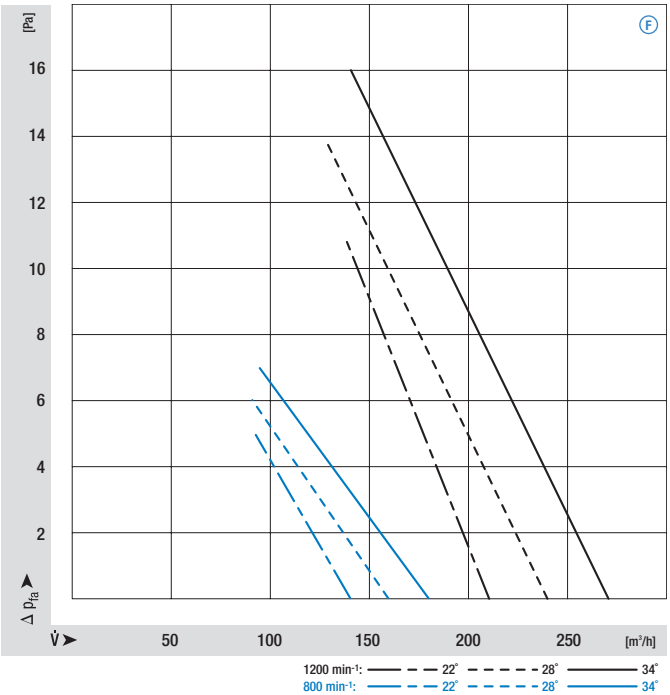

Ø 200, 1200 rpm / 800 rpm

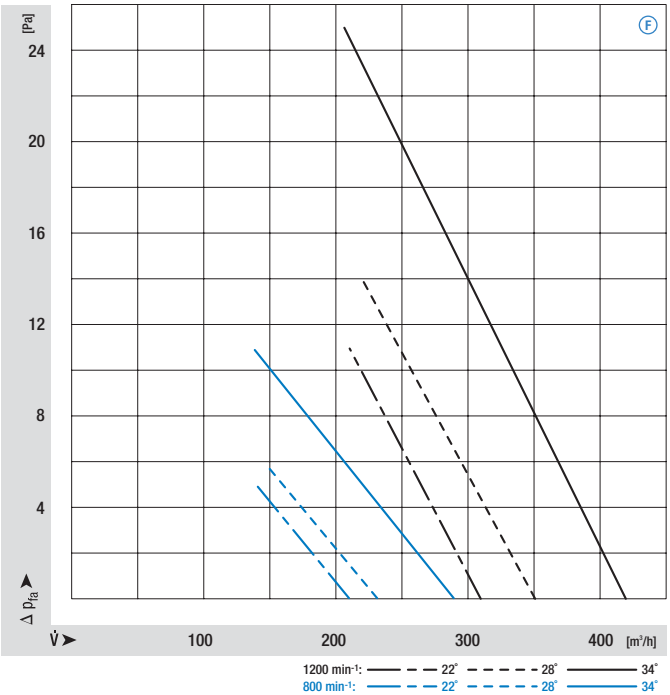

Ø 230, 1200 rpm / 800 rpm

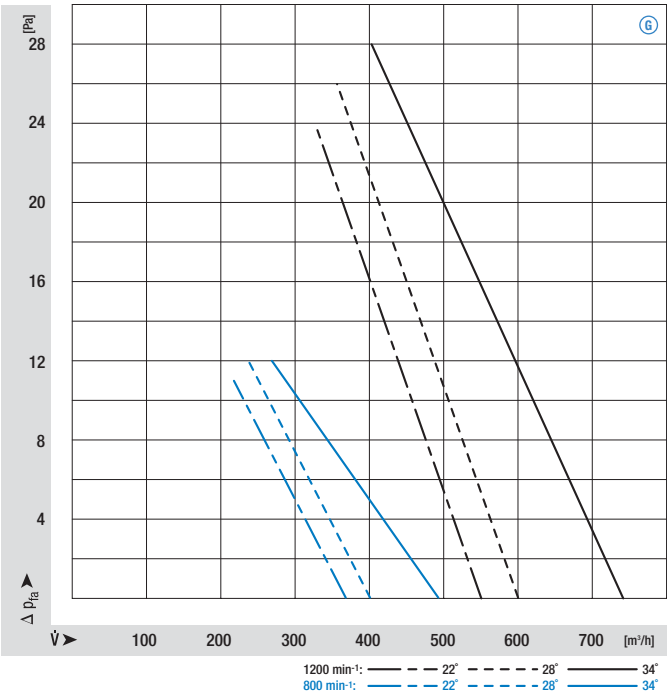

ebmpapst

Ø 254, 1200 rpm / 800 rpm

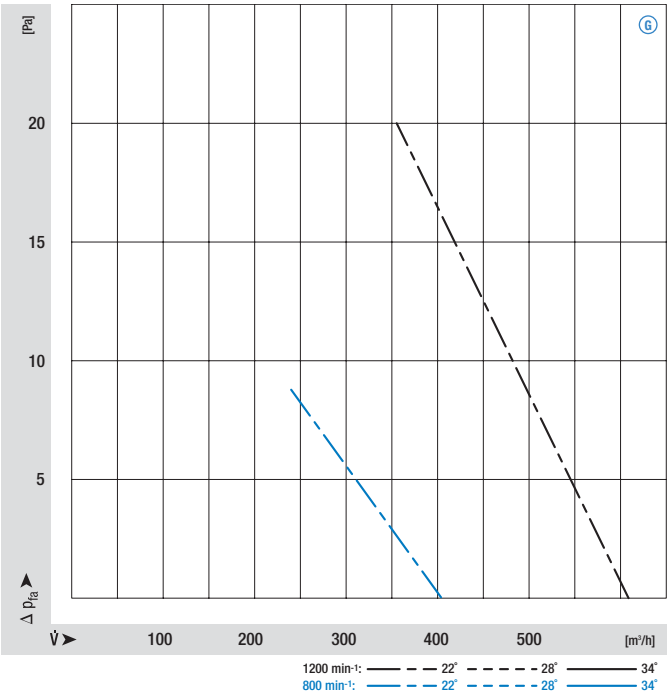

Energy-saving axial fans

- **Material:** Wall ring: Plastic PP20TV
  Blade: Sheet steel, coated in black
  Rotor: Coated in black
- **Number of blades:** 5
- **Direction of air flow:** "V", exhaust over struts
- **Direction of rotation:** Counter-clockwise, seen on rotor
- **Type of protection:** IP 44
- **Insulation class:** "B"
- **Mounting position:** Any
- **Condensate discharges:** None
- **Mode of operation:** Continuous operation (S1)
- **Bearings:** Maintenance-free ball bearings
- **Motor protection:** Via electronics
- **Electrical connection:** Line cord with plug
- **Protection class:** II
- **Product conforming to standard:** CE
- **Approvals:** VDE, UL, CSA
- **Speed:** Using the programming unit (see page 375), 2 speeds between n_{min} and n_{max} can be programmed.

Nominal data		Curve	Nominal voltage	Frequency	Air flow	Speed/rpm	Power input	Current draw	Sound pressure level	Max. operative range	Perm. amb. temp.	Mass
Type	**Motor**		**VAC**	**Hz**	**m³/h**	**rpm**	**W**	**A**	**dB(A)**	**Pa**	**°C**	**kg**
W1G200-EA91 -27	M1G 055-BD	A	115	50/60	500	1400	7	0.12	42	—	-30 to +50	1.0
W1G200-EA95 -47	M1G 055-BD	B	115	50/60	800	2200	27	0.42	56	—	-30 to +50	1.0
W1G200-EA87 -25	M1G 055-BD	A	230	50/60	500	1400	7	0.06	42	—	-30 to +50	1.0
W1G200-EA91 -45	M1G 055-BD	B	230	50/60	800	2200	27	0.21	56	—	-30 to +50	1.0

subject to alterations

Curves (programmable)

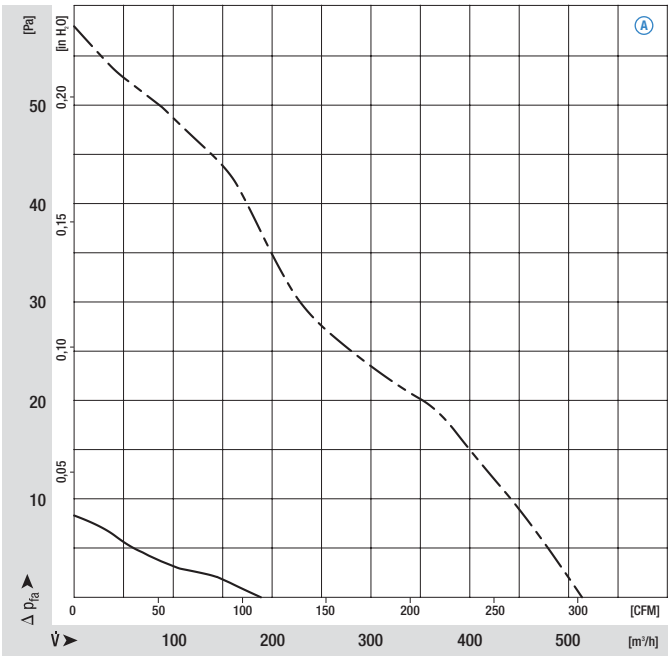

— – — $n_{max.}$ = 1400 min⁻¹ ——— $n_{min.}$ = 500 min⁻¹

Curves (programmable)

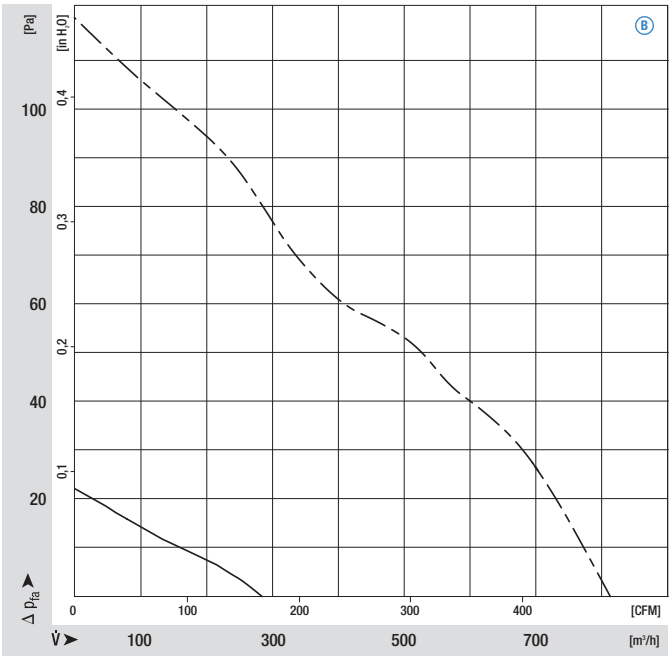

— – — $n_{max.}$ = 2200 min⁻¹ ——— $n_{min.}$ = 800 min⁻¹

ebmpapst
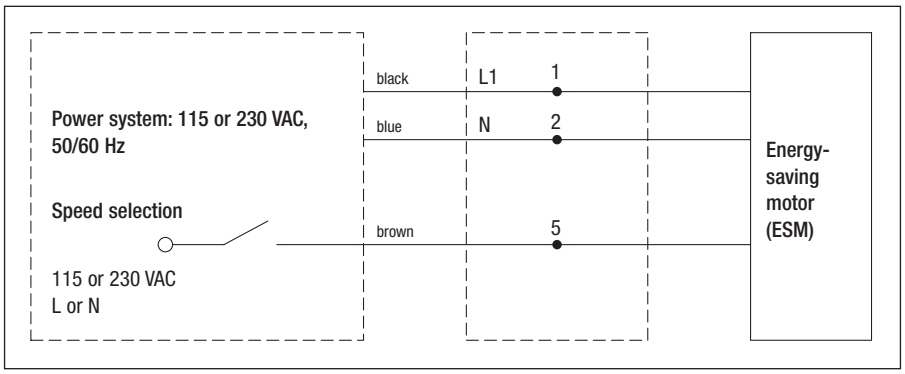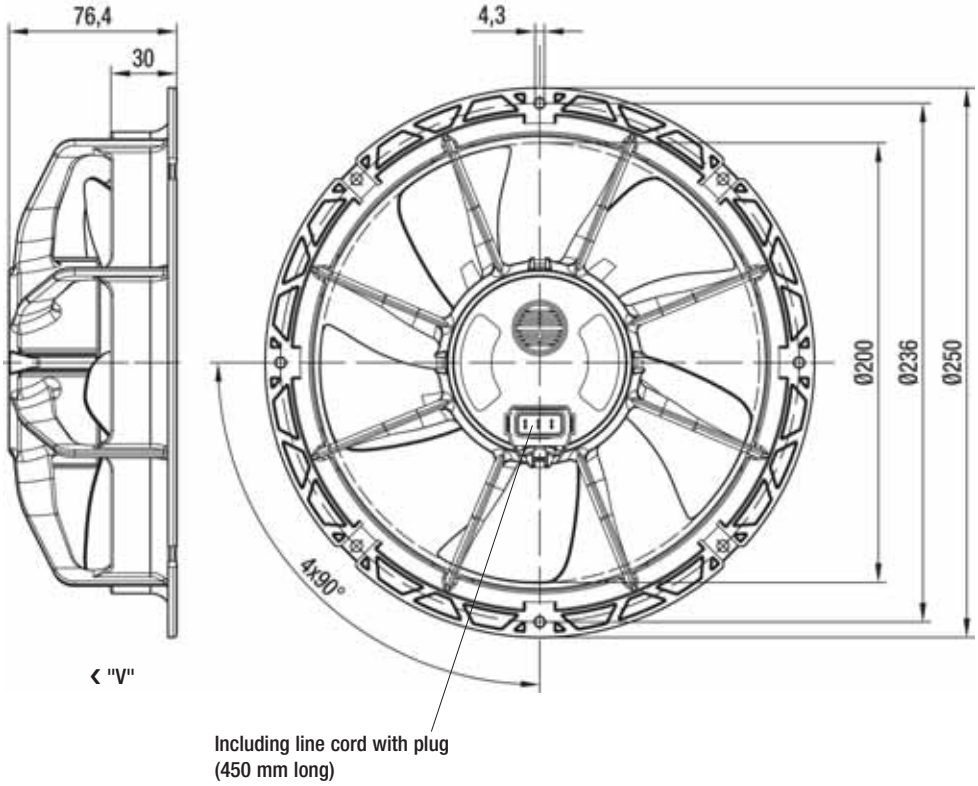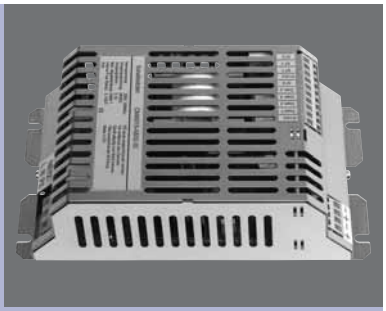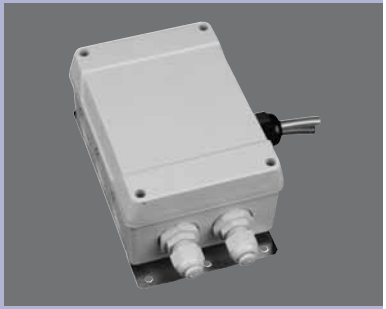
– **Electr. connection:**